XC918HST

XCMG

WHEEL LOADER

SOLID TO SUCCEED

1. Scan the QR code to follow "XCMG Loading Machinery"
2. Click the "Leader King" in the lower left corner to obtain more product details after registration

XCMG EARTHMOVING MACHINERY BUSINESS DIVISION

CUSTOMER SERVICE HOTLINE (IN CHINA): **400-110-9999**

ADDRESS: NO. 99, KUNPENG NORTH ROAD, XUZHOU ECONOMIC DEVELOPMENT ZONE, JIANGSU PROVINCE, CHINA

ZIP CODE: 221004

TEL: 0516 87938888

EMAIL: sales@xcmg.com

SITE: http://www.xcmg.com

2023-12

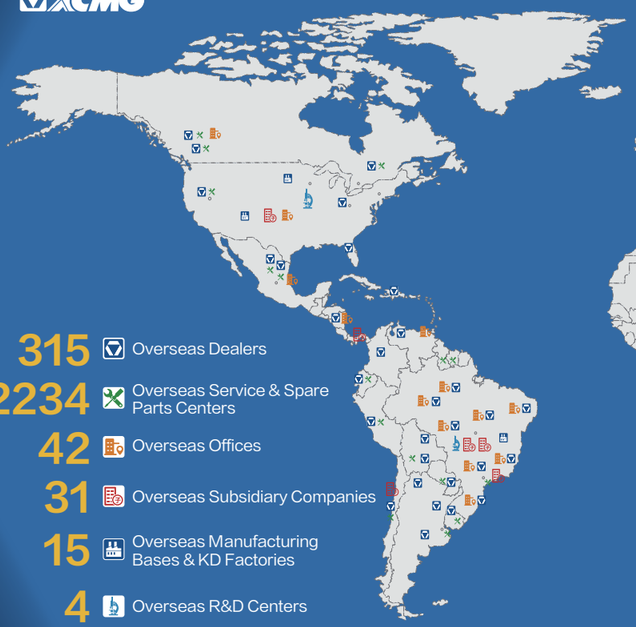

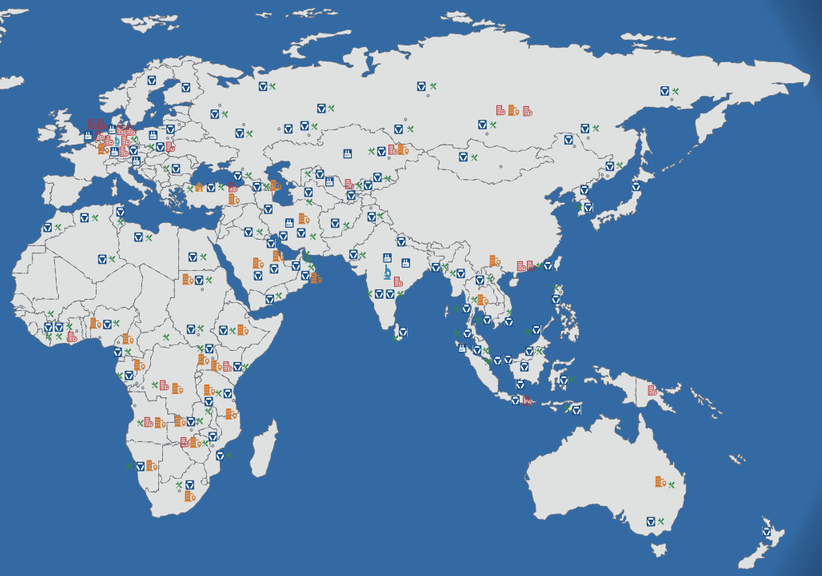

About XCMG

As a 100 billion-level leading company renowned for the largest scale, the most advanced technology, the largest export volume, and the highest competitiveness and influence in China's construction machinery industry, Xuzhou Construction Machinery Group Co., Ltd. (XCMG) not only has dominated the Chinese market for decades, but also is committed to expanding its worldwide presence as the third largest supplier in this field and 395th of Global 500.

The product portfolio offered by XCMG covers 16 categories such as hoisting machinery, excavation machinery, concrete machinery, mining machinery, earthmoving machinery, and road construction machinery, as well as three key components, i.e., hydraulic systems, transmission systems and electrical control systems. In these areas, our hoisting machinery ranks first in the world, and our complete solutions for road construction and maintenance machinery, piling machinery and concrete machinery also take the leading position in global rankings.

XCMG has been granted more than 8,000 patents in total, including more than 1,900 invention patents and more than 130 international PCT patents.

We have established our own R&D centers, manufacturing plants or KD factories in more than 10 countries, e.g., Germany, USA, Brazil and India, and have acquired 3 European companies including Schwing from Germany.

The manufacturing factory in Brazilian, which is built on a barren land with an investment of USD 350 million, has become a successful model of China-Brazil economic cooperation. At present, our products are exported to 187 countries and regions, covering 97% of the countries along the “Belt and Road”. XCMG takes the largest share of the business exported to 35 countries, with the annual export volume and overseas revenue remaining in first place and outperforming all other competitors in China.

Main features

Main features

Advanced technology

XC918HST hydrostatic loader adopts hydrostatic transmission technology. The complete machine is of a lightweight design structure with compact arrangement, providing high comfortableness, maintainability and reliability. With signals provided by the accelerator, brake pedal, sensor, and FNR, the hydrostatic controller of complete vehicle controls the travel motor displacement and motor speed in real time through the program to realize general travelling, fixed speed travelling, fixed engine speed travelling and other functions, and to achieve braking energy saving with the aid of inching brake.

Product reliability

The structure of complete machine adopts CAE simulation analysis, with high factor of safety. The front and rear frames adopt the complete frame structure for heavy load to withstand the resistance and impact load under various working conditions; the Z-bar working connecting rod is equipped for providing excellent lifting force and shoveling force, as well as strong operating reliability; the enhanced drive axle ensures high dynamic load coefficient, being more suitable for heavy-duty working conditions.

Product maintainability

The forward-tilt hood, with an opening angle more than 45°, is convenient for the maintenance of engine, radiator, hydraulic fuel tank, filter element, etc. in the engine compartment. The side-tilt cab, with an opening angle of 40°, is convenient for the overhaul of reduction case, travel motor, hydraulic valve block, etc.; the centralized arrangement of lubrication points makes the daily maintenance easy and fast; the fuel tank is located on the right side of the complete machine, and the oil filler is located on the outside of machine for ease of refueling; the complete vehicle controller is arranged in the pilot box at the right side of the cab, and the central fuse box is placed in the left box for easy maintenance.

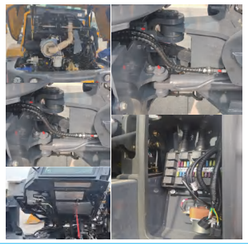

Comfortable operation and control

The panoramic pressurized cab is designed with a fastback hood, and accessible storage box and mobile phone storage box. It is subject to FNR pilot control, with adjustable seats and steering column self-adapting to human body needs at different percentiles. The complete machine uses Jack simulation technology and the best channel design, providing drivers a luxury driving experience.

Flexibility and versatility

The center articulated-body structure can ensure the center swing within a range of 10°, and the ±38° articulated steering. The short-tail design introduces smaller turning radius. The configured triplet hydraulic quick-change structure can satisfy the multiple purposes of one machine.

Safety and reliability

The wet braking system is safe and reliable; the integrated cab meets the demands of FOPS and ROPS;
The cab is equipped with 1 emergency stop switch inside. The engine will shut down if the emergency stop switch is pressed down, which can meet the safety demands of special working conditions; in addition, the cab is equipped with function buttons for hydraulic lock and quick change cylinder lock to reduce the safety risk caused by misoperation.

Engine

It is of high-pressure common rail turbocharged engine, adopting the DOC+DPF exhaust gas treatment method to satisfy European and American emission standards, and the engine is equipped with a glow plug upon delivery, rendering good cold-start performance. Model: 4TNV98CT-NTY Type: In-line four-cylinder, direct injection, water-cooled, four-stroke, and four-valve Emission standards: US Tier 4 final/EU Stage V Rated power/speed kw/r/min: 53.7/2500

Electrical system

The instrument can display information such as the complete machine speed, fuel level, water temperature and fault diagnosis, facilitating the driver to understand the vehicle status. The complete vehicle lights meet the CE standard. There are totally four LED working lights in front of and behind the cab (can be added), including two combined driving lights in the front frame, two combined lights in the rear taillight, one indoor overhead light, and one rotary alarm light. The fuse box is arranged in the cab, and the electrical components are easy for overhaul and maintenance. Voltage V: 12 Battery quantity: 1 Battery capacity AH: 120.

Powertrain system

Hydrostatic transmission gear-shifting system guarantees smooth reversal operation without impact phenomenon, facilitating to obtain the maximum traction at any speed and in any direction of driving. Besides, it is configured with manual control function for traction, effectively preventing tire wear caused by skid; the gear shift and direction-changing functions are integrated onto the FNR handle to facilitate the driver to operate the vehicle; the four-wheel drive + frame-articulated yaw mechanism brings excellent maneuverability to the vehicle under any road conditions; a limited slip differential (LSD) is configured onto the drive axle to maximize traction in soft and slippery road conditions. Swing angle ±° : 9 Wheel base mm: 2150 Wheel track mm: 1550 Tire size: 16/70-20.

Working connecting rod device

Inverted six-connecting rod (Z-bar) working device, providing sufficient shoveling force for the bucket; the configured EN quick-change device, providing strong adaptability and versatility. Connecting rod type: Z-bar Number of boom cylinders: 2 Number of tipping cylinders: 1 Total cycling time:s: 4.8 s、2.6 s、1.0 s.

Brake system

The inching brake pedal provides hydraulic wear-free brake in the first half of the stroke. The speed at this stage will decrease with the increase of the depth of the brake pedal, so that the vehicle speed can be controlled at a fixed engine speed; when the brake pedal is stamped continuously to the very bottom, the full hydraulic wet brake takes effect to carry out mechanical brake on the drive axle, thereby stopping the vehicle.
Mechanical parking brake, which is to tension the drum brake on the reduction case by pulling the parking brake handle, so that the braking force is applied to the four tires.

Steering system

Hydraulic steering, powered by hydraulic pump, can accurately complete steering at different engine speeds; when lifting with load and driving at high speed, the steering speed does not change; and the frame-articulated steering and yaw mechanism are subject to elastic limits.Number of steering cylinders: 1 Steering system pressure MPa: 19 Steering angle ±° : 38.

Cab

The FOPS&ROPS cab, which meets safety requirements of international standards (ISO3471, and ISO3449); with clear view inside the cab, ensuring that all operating mechanisms are within the driver's field of view; with adjustable steering column and seats, easy to be adjusted according to demands; and with the configured heating and cooling air conditioning, radio, and glass defrosting function, introducing more comfortable driving experience.

Hydraulic system

Triplet pilot working hydraulic system, powered by the hydraulic pump, employs the main handle to control boom lifting and bucket folding; the auxiliary handle controls the third oil circuit (if configured with multi-function tools); the quick change cylinder is controlled by a separate button, and is provided with a hydraulic lock and quick change cylinder lock button to prevent from misoperation and ensure the safe operation of the hydraulic system.Operating pressure MPa: 24 Max. flow L/min: 90.

Main components

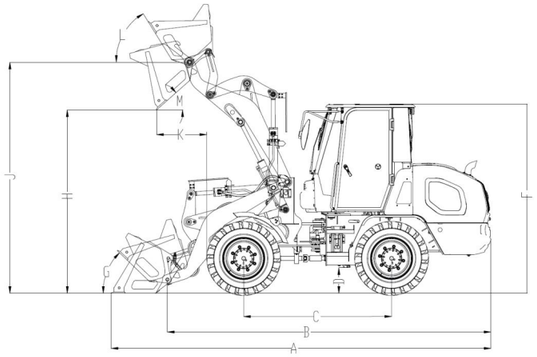

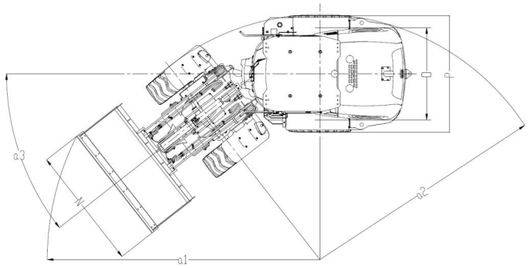

Item		Parameter
Overall length of complete machine, A		5520 mm
Overall length of complete machine (excluding bucket), B		4703 mm
Bucket width, N		2060 mm
Max. width of main machine, P		1960 mm
Max. total height of main machine, F		2745 mm
Wheel base, C		2150 mm
Wheel track, O		1550 mm
Min. ground clearance, D		370 mm
Bucket capacity (Standard quick coupler)		1.0 m^3
Operating weight		6300 kg
Travel speed	Gear I (forward/reverse)	9 km/h /9 km/h
	Gear II (forward/reverse)	20 km/h /20 km/h
Max. tractive force		52 kN
Max. gradeability		57 %
Rollback angle on ground, G		44 °
Max. lifting position of boom	Dumping height, H	2660 mm
	Pivot pin height, J	3354 mm
	Unloading distance at maximum lifting, K	723 mm
	Rollback angle, L	58 °
	Dumping angle, M	42 °
Max. breakout force		58 kN
Lift duration		≤6 s
Total cycle time		≤11 s
Turning radius	Outside of bucket, a1	4602 mm
	Outside of tire, a2	4123 mm
Articulated steering angle, a3		±38 °
Tire size		16/70-20
Tire inflation pressure	Front wheel	0.30±0.01 MPa
	Rear wheel	0.29±0.01 MPa

- Note: The weight of a standard machine includes an appropriate amount of various lubricants, a full tank of fuel, and a 75kg operator.
- The technology of XCMG loader is subject to constant improvement and upgrading. In case the specifications or detailed appearance contained in this brochure differ from actual products, the latter shall prevail;
- XCMG reserves the right of final interpretation for the above. Our products may be modified without prior notice to users.

XCMG approved attachments

Genuine parts

Financial solutions

Maintenance contract

Telematics

Professional Integrated Complete Solutions

XCMG has built a strong reputation based on the quality,reliability and durability of its construction machinery. What's more, XCMG has gradually established a service network to constantly provide its local integrated and highly efficient complete solutions for all customers.

Full Range of Services Ready for you

In order to respond to your needs as fast as possible, XCMG's experts are on their way to your job site from one of our facilities near you. Full range of services are availible in order to reduce your total cost of ownership and increase your revenue.
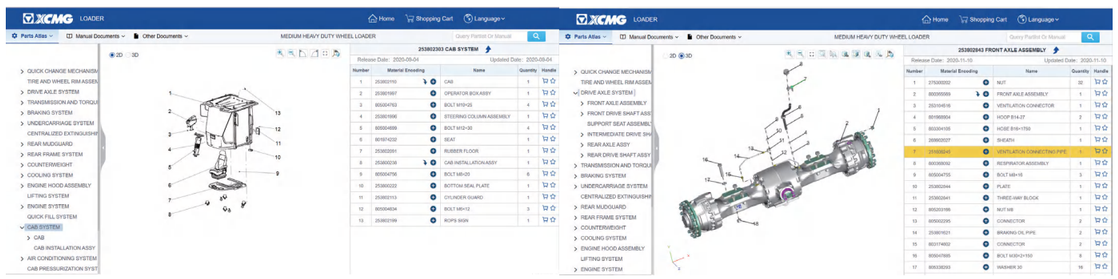
XCMG Global Spare Parts System